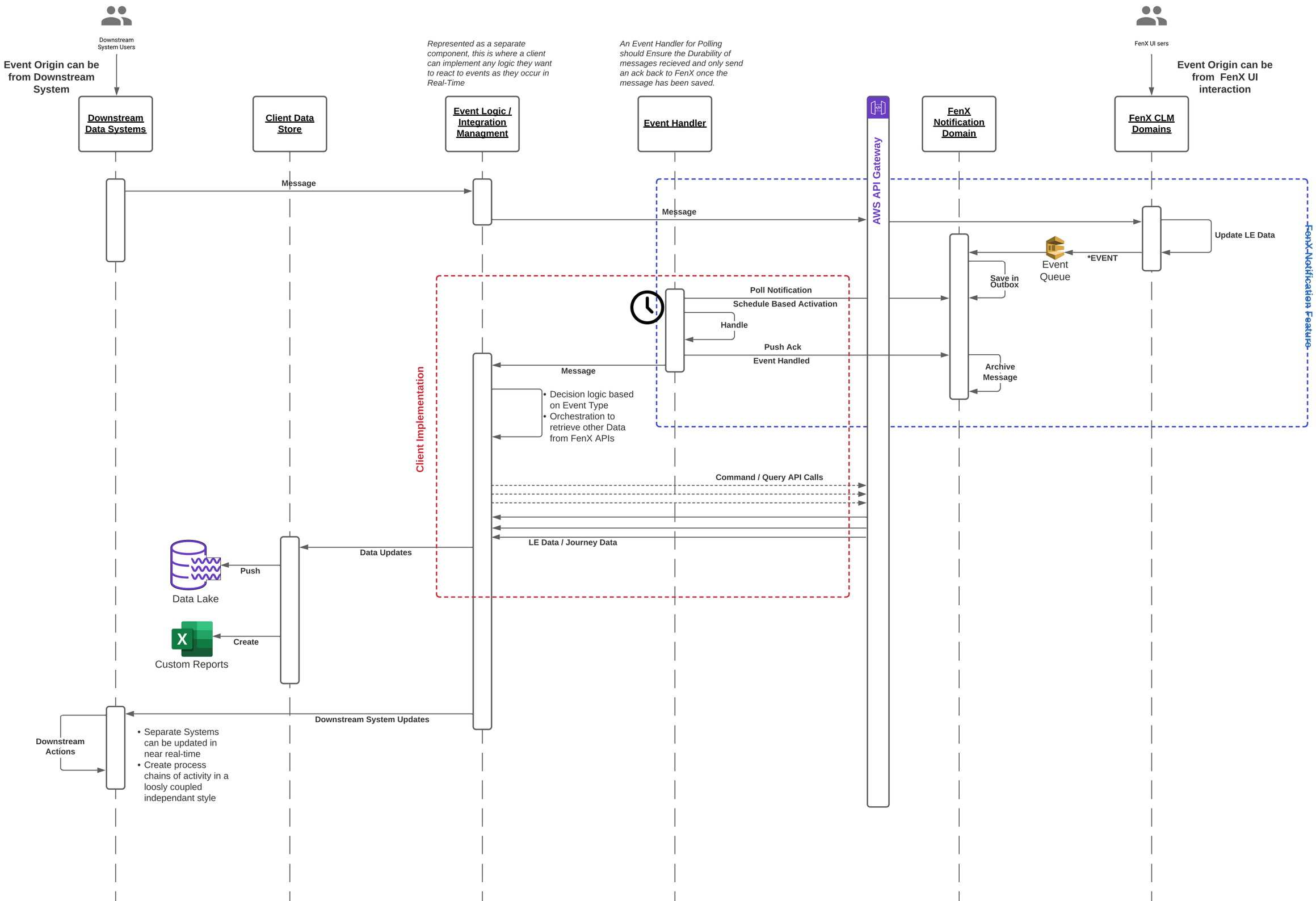
Downstream System Users
Event Origin can be from Downstream System
Downstream Data Systems
Client Data Store
Event Logic / Integration Managment
Represented as a separate component, this is where a client can implement any logic they want to react to events as they occur in Real-Time
Event Handler
An Event Handler for Polling should Ensure the Durability of messages recieved and only send an ack back to FenX once the message has been saved.
AWS API Gateway
FenX Notification Domain
FenX UI sers
Event Origin can be from FenX UI interaction
FenX CLM Domains
Message
Message
Update LE Data
*EVENT
Event Queue
Save in Outbox
Poll Notification
Schedule Based Activation
Handle
Push Ack
Event Handled
Archive Message
Message
• Decision logic based on Event Type
• Orchestration to retrieve other Data from FenX APIs
Client Implementation
FenX Notification Feature
Command / Query API Calls
LE Data / Journey Data
Data Updates
Push
Data Lake
Create
Custom Reports
Downstream System Updates
Downstream Actions
• Separate Systems can be updated in near real-time
• Create process chains of activity in a loosly coupled independant style